White Gum Air Park 737-200 Project Stage II
Tourist Development Application

White Gum Air Park is a property in Western Australia's Wheat Belt catering for the recreational pilot and aircraft owners. Together with White Gum Farm, a commercial aircraft landing area, camping and caravan site, bar & grill, and many other tourist facilities we are developing an increase in tourism attractions for York and the Avon Valley.

In November of 2016 we presented our 'Big Thing' proposal to the Shire of York, this proposal was pitched with similar references to other successful attractions throughout the country. Queensland has The Big Pineapple; New South Wales has The Big Banana… (and The Big Bogan); South Australia has The Big Lobster… What does York have? We proposed two Boeing 737 aircraft.

Committed to the relocation of these aircraft, in July 2017 we were granted approval for 'Storage of Two Aircrafts for Private Use (Use Not Listed): Lot 2308 Cameron Road, Malebelling - SY087-0717'. On the 27th March 2019 the fuselage of the first aircraft arrived in York, finalising the relocation of all parts belonging to the first aircraft. We are now in the process of reassembling this aircraft, returning it to its original form.

Interest in the project has been unprecedented. The turn-out from the public along the route and in York from the locals has been heart-warming and encouraging. Coverage from the media, including Sunrise and Perth Television News and Newspapers on the arrival of the first fuselage was invaluable. We have featured in several media reports including reports from the Eastern States and around the world, as far away as Alberta, Western Canada.

With support from the Shire of York, as a private development, we intend to promote the two Boeing 737 aircraft as a tourist attraction. The potential growth in tourism will be of benefit to all residents and existing businesses in York, as well as several employment opportunities. Our plans for development align with the proposed York planning scheme No 3

9. Aims of Scheme (are to)
(b) facilitate innovative, creative and diverse business and employment opportunities.

Our intention is to have both aircraft available to the public.
One aircraft will become a static display. Escorted by a guide, the aircraft will display its hidden secrets. Visitors will be invited to view the flight deck as well as the cabin area. The journey through the interior of the aircraft will progressively show the internal structure of a jet aircraft, eventually revealing the aircraft skin and associated engineering construction. Outside of the aircraft, the guide will reveal the engines, baggage holds and some of the 'secret' areas and compartments.
One aircraft is to become the ultimate 'Air BnB', offering a unique accommodation experience. Guests will share the entire aircraft for short stay. ~~Accommodation will be limited to two bedrooms and two bathrooms with an option to sleep 4+4 persons overnight~~. A communal lounge will incorporate the flight deck area of the aircraft.

We expect a number of tourists/visitors will be interested in both projects as they progress towards a final goal. We will encourage any visitors to inspect the aircraft, when appropriate, accompanied by White Gum staff.

Please consider this application for the below–

Tourist Development

(a) short-term accommodation for guests; and
(b) onsite facilities for the use of guests; and
(c) facilities for the management of the development;

Boeing Aircraft 737 VH-OZX	–	Short Term Cabin Accommodation For Guests.
Boeing Aircraft 737 VH-OZU	–	Static Exhibition For Guests and Public.
Hangar 01	–	Workforce Accommodation.

Yours Faithfully,

Monday, 13th May 2019

WHITE GUM AIR PARK 737-200 PROJECT STAGE 11
TOURIST DEVELOPMENT APPLICATION

Development Details

Nature of Use.
Short stay accommodation – Guests will hire the 737 for overnight accommodation, with a maximum of 8 guests.
Static Display – Visitors will be guided through the aircraft to view the flight deck and exposed sections of the aircraft. They will continue to the outside, where they will be shown the undercarriage and baggage hold areas.

Hours of Operation.
Although not formalised as yet, it is envisaged, the Short Stay accommodation will be from 2pm till 11am. The Static display will be open for tours at set times, between 10am and 4pm

Number of employees and patrons.
Both of these figures are difficult to gauge. The static display may require two guides per tour, with other staff required to usher patrons to appropriate areas. It is hoped that patron numbers will be significant. To commence, it is envisaged, tours will be based on demand, catering for 20 to 30 per group, consisting primarily of visitors to the White Gum Farm facility

Car Parking.
Tour patrons and staff will park at White Gum Farm, and be ushered from there to the static display. There will be 2 car parking bays, constructed to relevant standards, provided at the accommodation aircraft. These details will be finalised in the final grounds plan, to include landscaping and pathways.

Town Planning Scheme Requirements.
It is considered that the development is within the requirements of TPS No2 and TPS No3.

Nuisance Emmissions.
There are no emissions which will cause nuisance.

Signage.
At this stage, no signage is being considered.

Heritage Significance
There is no Heritage Significance to be considered.

Services and Facilities.
Only the short stay aircraft will have water and sewer connected. Water will be supplied by tank water, with the tank being filled with existing resources on the property.
Sewer will be connected to the required standard.

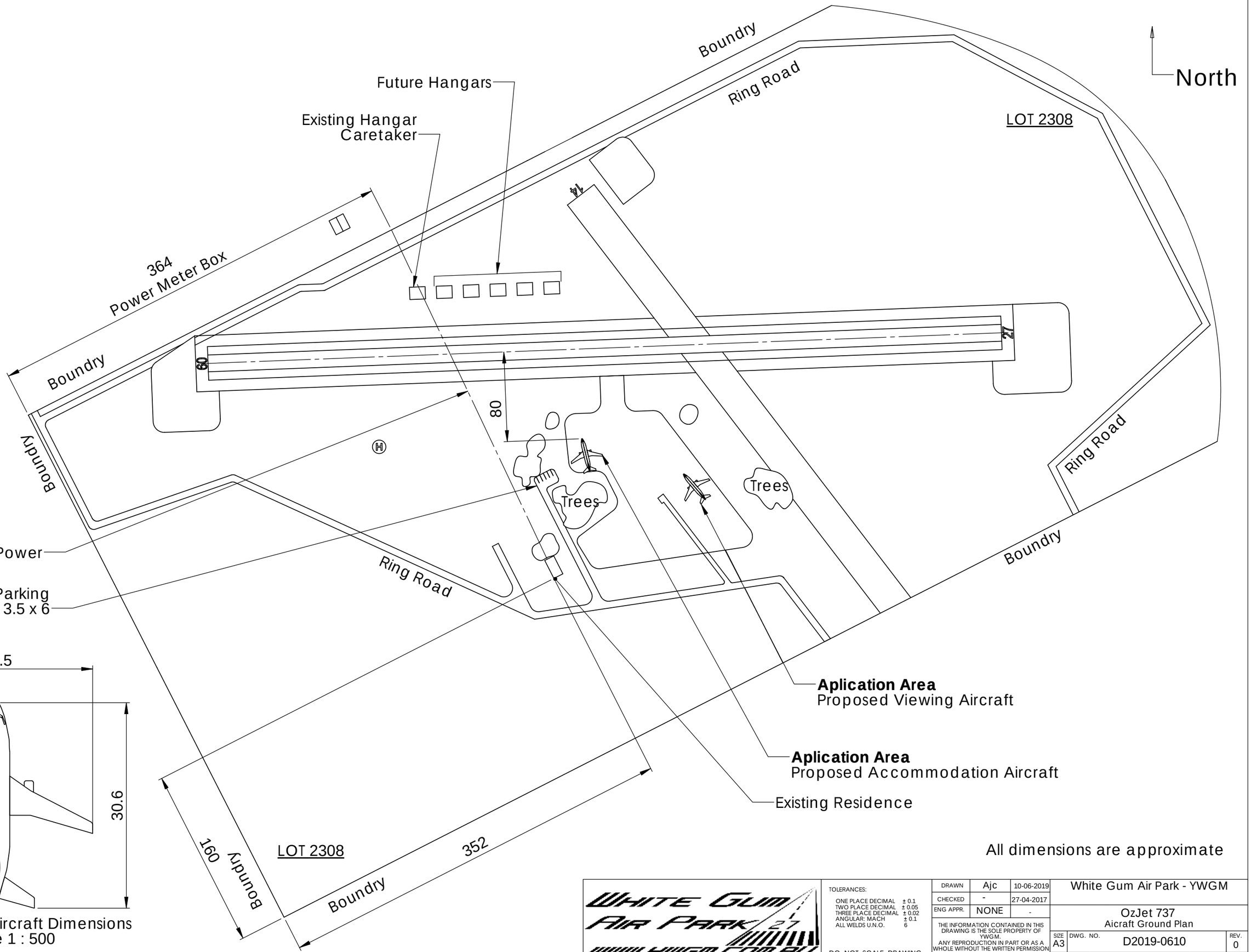

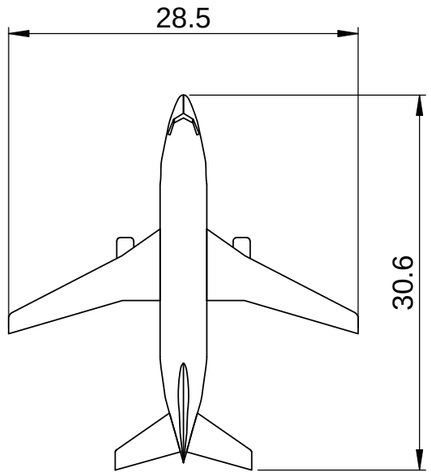

Approximate Aircraft Dimensions
Scale 1 : 500

WHITE GUM AIR PARK
www.ywgm.com.au

TOLERANCES:

ONE PLACE DECIMAL	± 0.1
TWO PLACE DECIMAL	± 0.05
THREE PLACE DECIMAL	± 0.02
ANGULAR: MACH	± 0.1
ALL WELDS U.N.O.	6

DO NOT SCALE DRAWING

DRAWN	Ajc	10-06-2019
CHECKED	-	27-04-2017
ENG APPR.	NONE	-

THE INFORMATION CONTAINED IN THIS DRAWING IS THE SOLE PROPERTY OF YWGM.
ANY REPRODUCTION IN PART OR AS A WHOLE WITHOUT THE WRITTEN PERMISSION OF YWGM IS PROHIBITED.

White Gum Air Park - YWGM

OzJet 737
Aicraft Ground Plan

SIZE	DWG. NO.	REV.
A3	D2019-0610	0

SCALE: 1:3000 WEIGHT: 0 Kg SHEET 1 OF 2

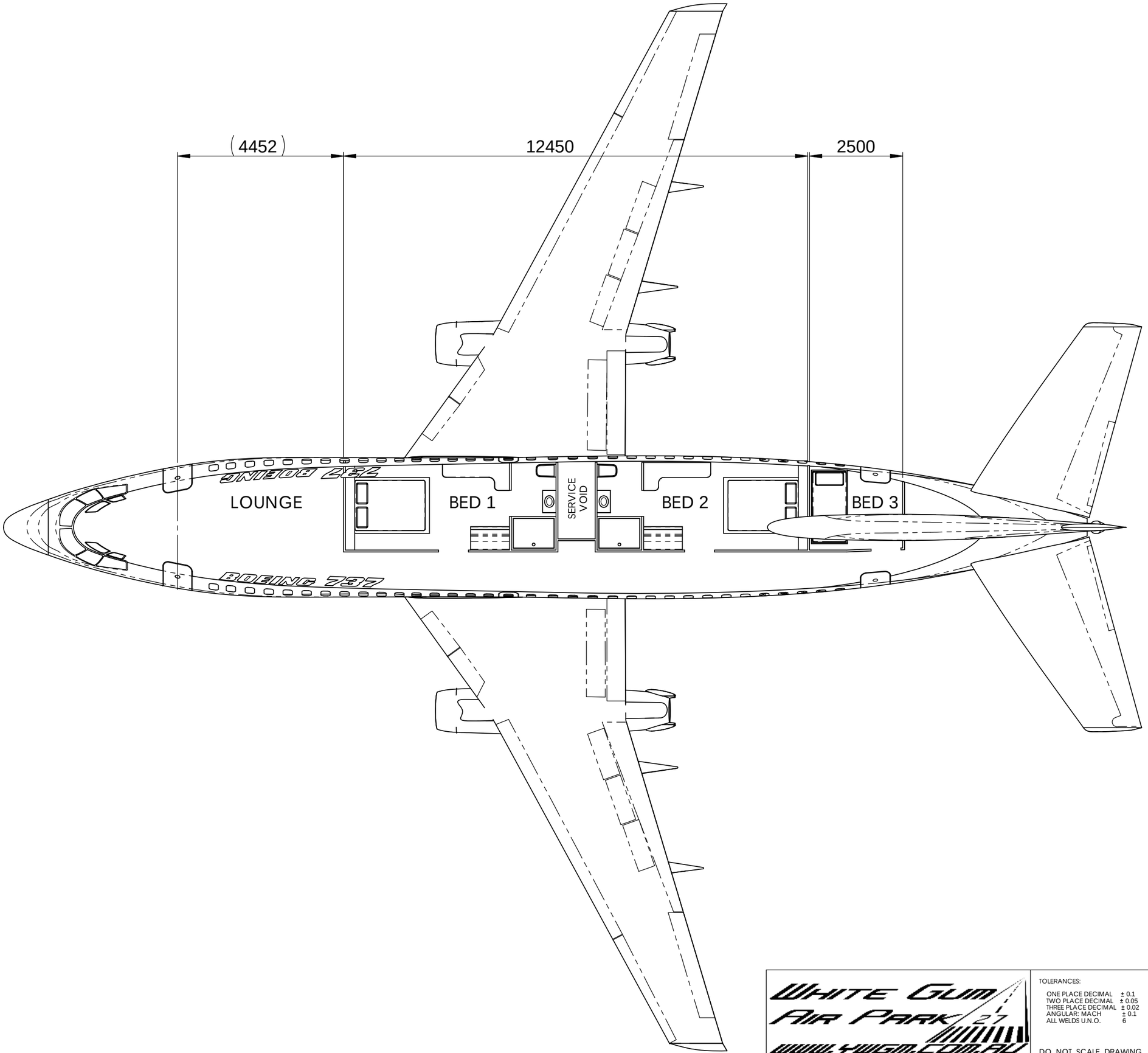

WHITE GUM AIR PARK 27
WWW.YWGM.COM.AU

TOLERANCES:

ONE PLACE DECIMAL	± 0.1
TWO PLACE DECIMAL	± 0.05
THREE PLACE DECIMAL	± 0.02
ANGULAR: MACH	± 0.1
ALL WELDS U.N.O.	6

DO NOT SCALE DRAWING

DRAWN	Ajc	27-04-2019
CHECKED	-	-
ENG APPR.	-	-

THE INFORMATION CONTAINED IN THIS DRAWING IS THE SOLE PROPERTY OF YWGM.
ANY REPRODUCTION IN PART OR AS A WHOLE WITHOUT THE WRITTEN PERMISSION OF YWGM IS PROHIBITED.

White Gum Air Park - YWGM

OzJet 737 Aircraft
Accommodation Proposal

SIZE	DWG. NO.	REV.
A3	D2019-0427-01	0

SCALE: 1:100 | WEIGHT: 0 Kg | SHEET 1 OF 2

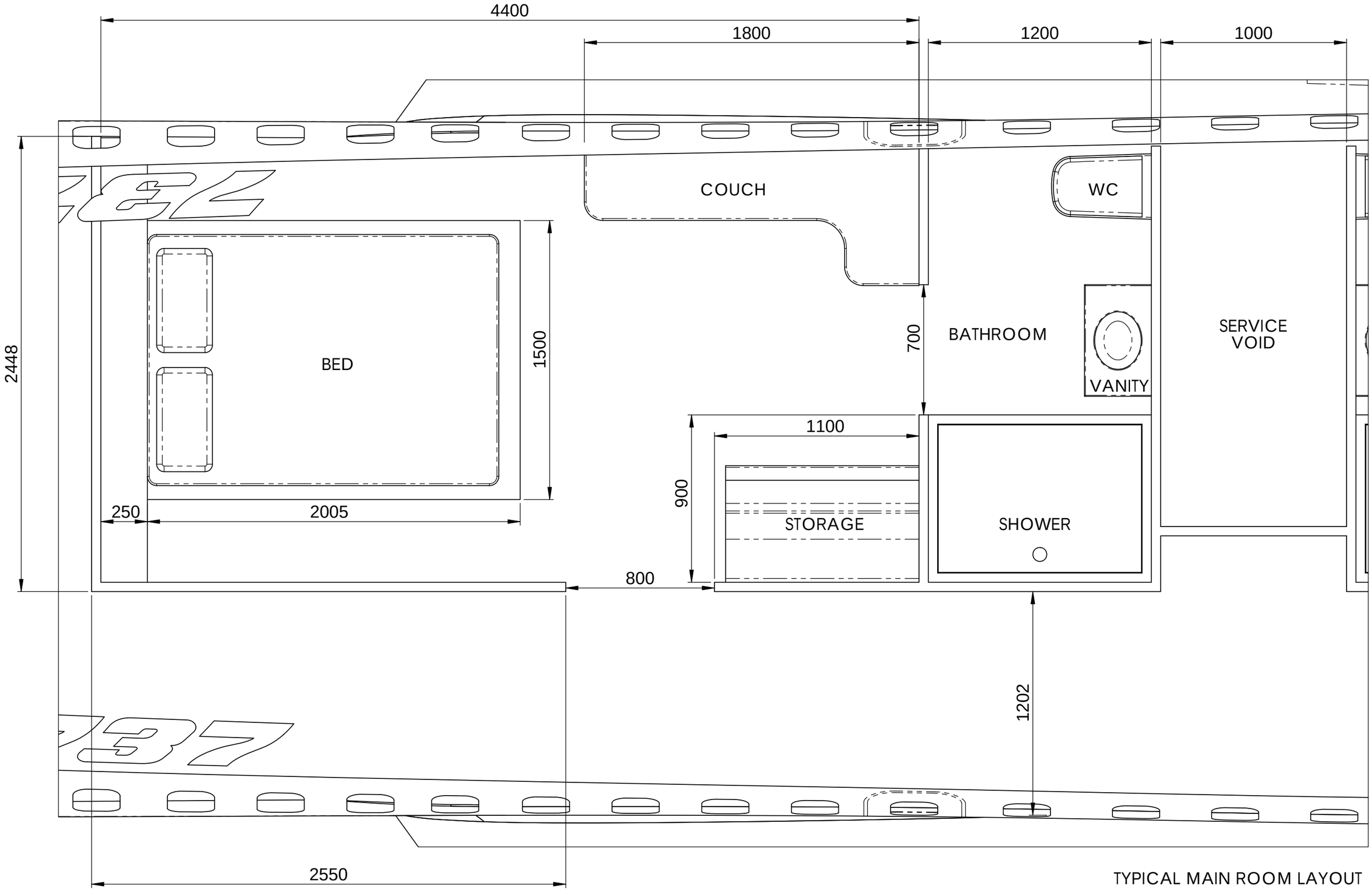

TYPICAL MAIN ROOM LAYOUT

WHITE GUM AIR PARK 27
WWW.YWGM.COM.AU

TOLERANCES:

ONE PLACE DECIMAL	± 0.1
TWO PLACE DECIMAL	± 0.05
THREE PLACE DECIMAL	± 0.02
ANGULAR: MACH	± 0.1
ALL WELDS U.N.O.	6

DO NOT SCALE DRAWING

DRAWN	Ajc	27-04-2019
CHECKED	-	-
ENG APPR.	-	-

THE INFORMATION CONTAINED IN THIS DRAWING IS THE SOLE PROPERTY OF YWGM.
ANY REPRODUCTION IN PART OR AS A WHOLE WITHOUT THE WRITTEN PERMISSION OF YWGM IS PROHIBITED.

White Gum Air Park - YWGM

OzJet 737 Aircraft
Accommodation Proposal

SIZE	DWG. NO.	REV.
A3	D2019-0427-01	0

SCALE: 1:20 | WEIGHT: 0 Kg | SHEET 2 OF 2

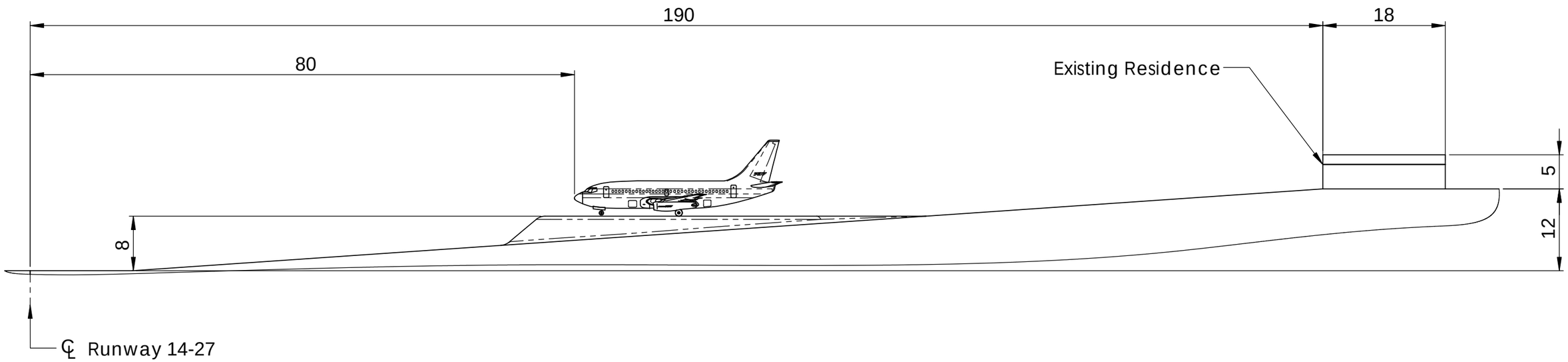

Western Elevation

All dimensions are approximate

WHITE GUM AIR PARK
WWW.YWGM.COM.AU

TOLERANCES:

ONE PLACE DECIMAL ± 0.1
TWO PLACE DECIMAL ± 0.05
THREE PLACE DECIMAL ± 0.02
ANGULAR: MACH ± 0.1
ALL WELDS U.N.O. 6

DO NOT SCALE DRAWING

DRAWN	Ajc	10-06-2019
CHECKED	-	27-04-2017
ENG APPR.	NONE	-

THE INFORMATION CONTAINED IN THIS DRAWING IS THE SOLE PROPERTY OF YWGM.
ANY REPRODUCTION IN PART OR AS A WHOLE WITHOUT THE WRITTEN PERMISSION OF YWGM IS PROHIBITED.

White Gum Air Park - YWGM

OzJet 737
Aicraft Ground Plan

SIZE	DWG. NO.	REV.
A3	D2019-0610	0

SCALE: 1:600 | WEIGHT: 0 Kg | SHEET 2 OF 2

Appendix C

Aircraft dimensions

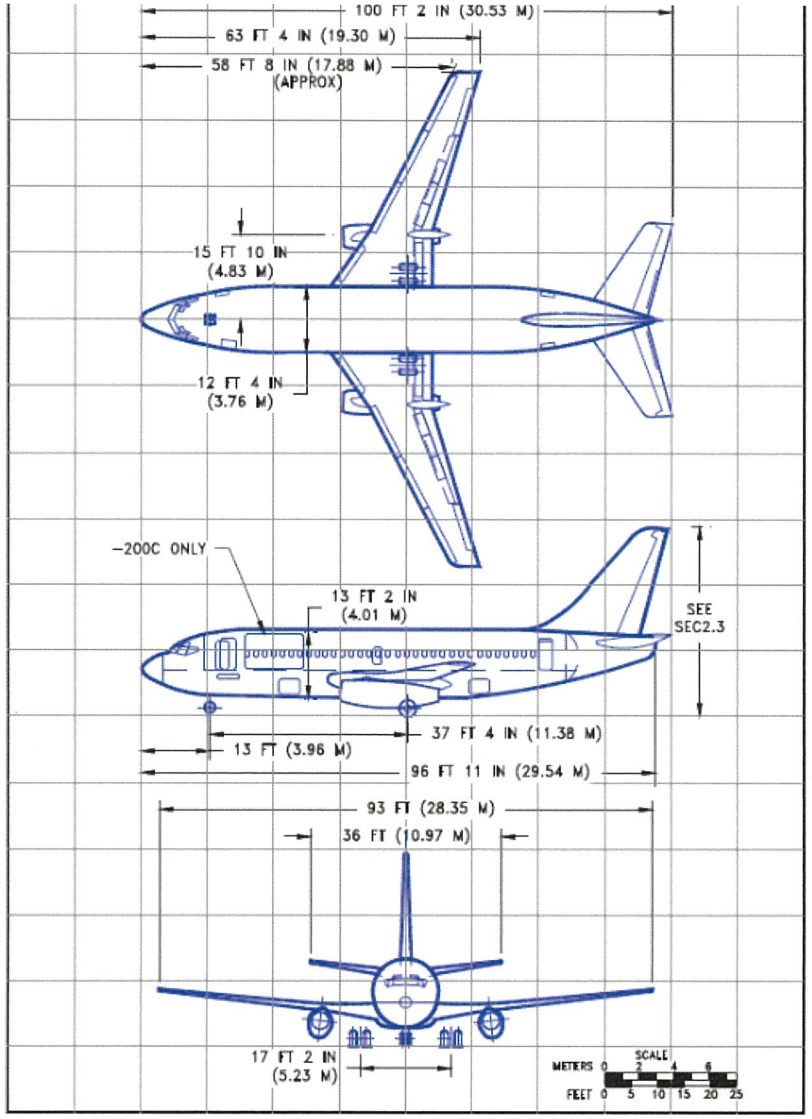

CERTIFIED
MetroCert
BUILDING APPROVALS
12/09/2016

Note:

Hangar Floor Area	88m²
Accomodation Floor Area	66m²
Total Floor Area	154m²

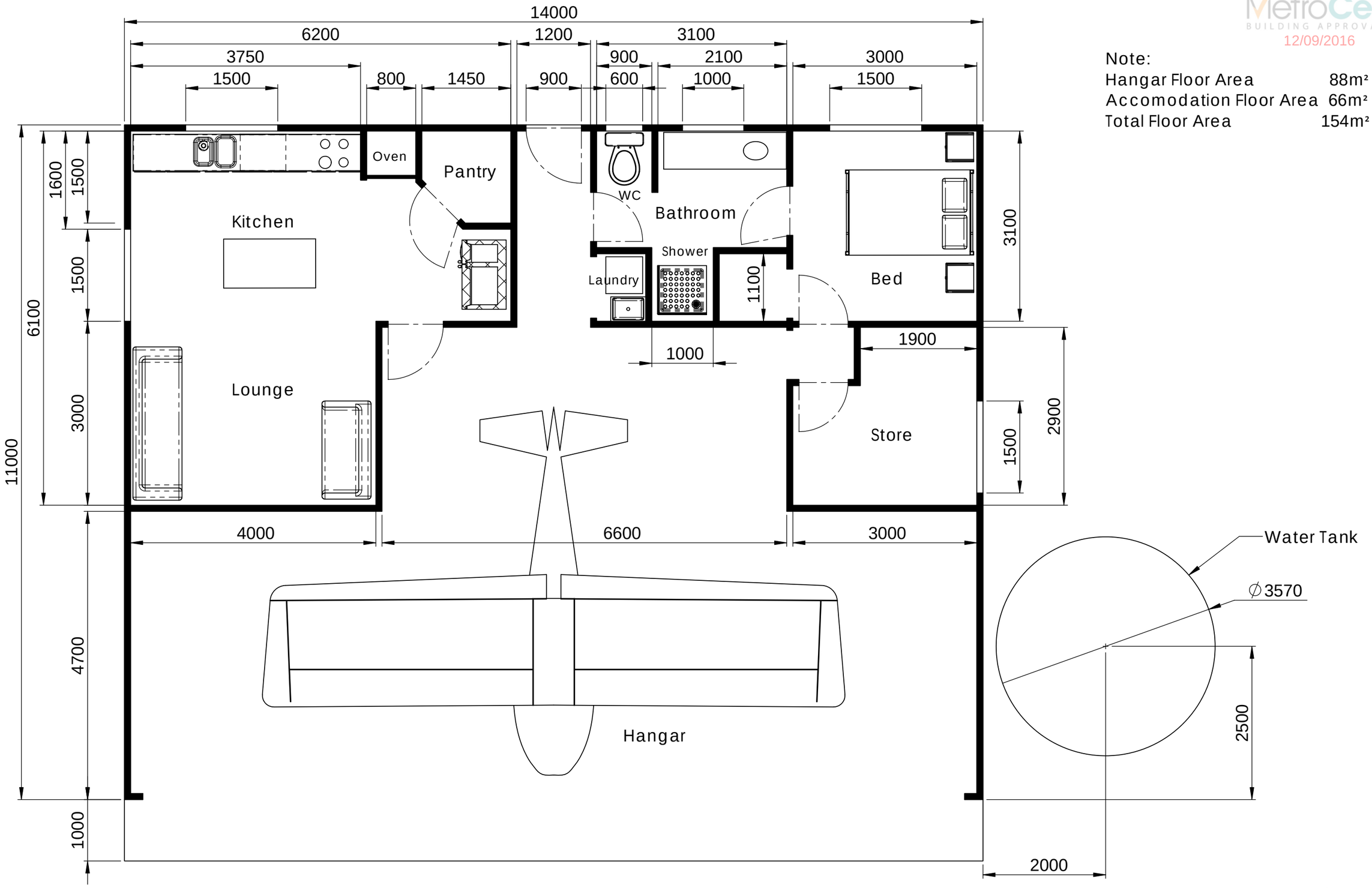

Internal Layout

WHITE GUM AIR PARK
WWW.YWGM.COM.AU

TOLERANCES:

ONE PLACE DECIMAL	± 0.1
TWO PLACE DECIMAL	± 0.05
THREE PLACE DECIMAL	± 0.02
ANGULAR: MACH	± 0.1
ALL WELDS U.N.O.	6

DO NOT SCALE DRAWING

DRAWN	Ajc	27-07-2016
CHECKED	-	-
ENG APPR.	NONE	-

THE INFORMATION CONTAINED IN THIS DRAWING IS THE SOLE PROPERTY OF YWGM.
ANY REPRODUCTION IN PART OR AS A WHOLE WITHOUT THE WRITTEN PERMISSION OF YWGM IS PROHIBITED.

White Gum Air Park - YWGM

Hangar Apartment
H01 - Fred Selly

SIZE	DWG. NO.	REV.
A3	A2015-0315-H1	3

SCALE: 1:60 | WEIGHT: 0 Kg | SHEET 1 OF 7

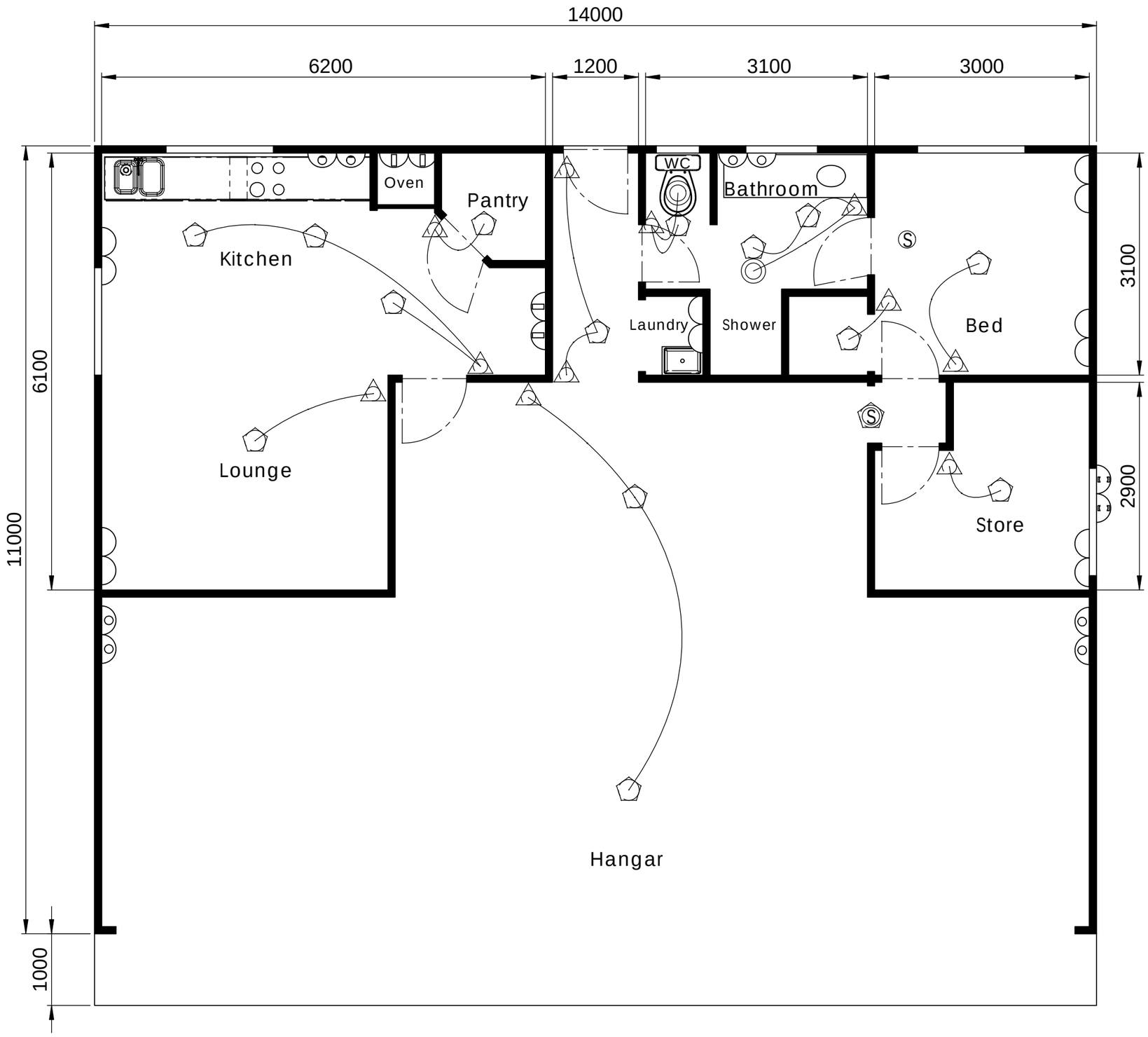

Note:

- GPO 200 AFL
- GPO 1000 AFL
- GPO 1500 AFL
- GPO Weatherproof
- Exhaust Fan
- Smoke Alarm
- Smoke Alarm/Escape Light
- Ceiling Light (LED)
- Switch

CERTIFIED MetroCert BUILDING APPROVALS 12/09/2016

Electrical Layout

WHITE GUM AIR PARK YWGM
WWW.YWGM.COM.AU

TOLERANCES:

ONE PLACE DECIMAL	± 0.1
TWO PLACE DECIMAL	± 0.05
THREE PLACE DECIMAL	± 0.02
ANGULAR: MACH	± 0.1
ALL WELDS U.N.O.	6

DO NOT SCALE DRAWING

DRAWN	Ajc	27-07-2016
CHECKED	-	-
ENG APPR.	NONE	-

THE INFORMATION CONTAINED IN THIS DRAWING IS THE SOLE PROPERTY OF YWGM. ANY REPRODUCTION IN PART OR AS A WHOLE WITHOUT THE WRITTEN PERMISSION OF YWGM IS PROHIBITED.

White Gum Air Park - YWGM

Hangar Apartment
H01 - Fred Selly

SIZE	DWG. NO.	REV.
A3	A2015-0315-H1	3

SCALE: 1:60 | WEIGHT: 0 Kg | SHEET 2 OF 7

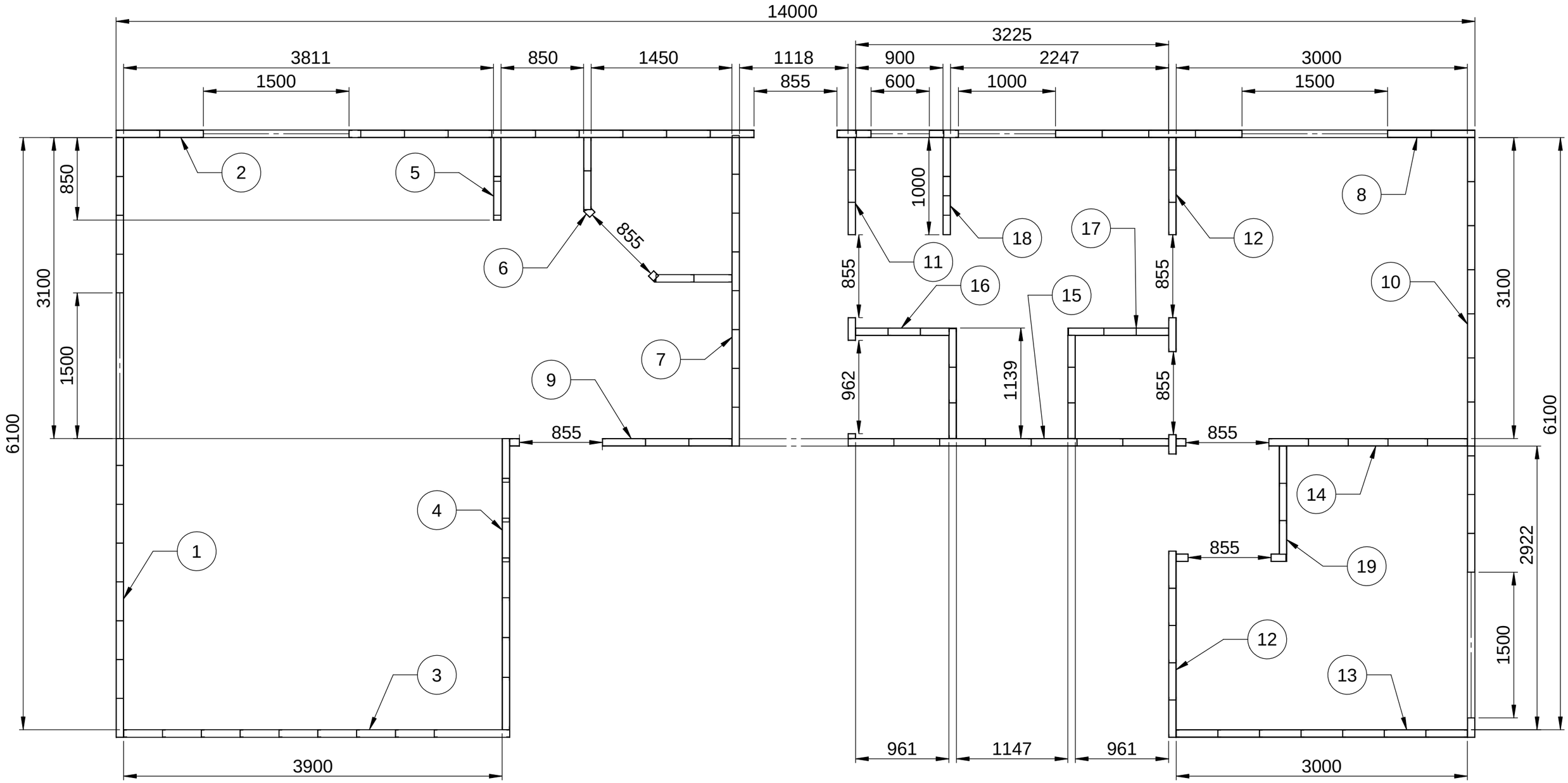

ITEM NO.	PART NUMBER	DESCRIPTION	QTY.	SHEET
1	F1	Wall Frame	1	
2	F2	Wall Frame	1	
3	F3	Wall Frame	1	
4	F4	Wall Frame	1	
5	F5	Wall Frame	1	
6	F6	Wall Frame	1	
7	F7	Wall Frame	1	
8	F8	Wall Frame	1	
9	F15	Wall Frame	1	
10	F9	Wall Frame	1	
11	F10	Wall Frame	1	

ITEM NO.	PART NUMBER	DESCRIPTION	QTY.	SHEET
11	F11	Wall Frame	1	
12	F15	Wall Frame	1	
13	F12	Wall Frame	1	
14	F13	Wall Frame	1	
15	F14	Wall Frame	1	
16	F16	Wall Frame	1	
17	F17	Wall Frame	1	
18	F18	Wall Frame	1	
19	F19	Wall Frame	1	

CERTIFIED
MetroCert
BUILDING APPROVALS
12/09/2016

Stud Wall Layout

WHITE GUM AIR PARK
WWW.YWGM.COM.AU

TOLERANCES:
ONE PLACE DECIMAL ± 0.1
TWO PLACE DECIMAL ± 0.05
THREE PLACE DECIMAL ± 0.02
ANGULAR: MACH ± 0.1
ALL WELDS U.N.O. 6

DO NOT SCALE DRAWING

DRAWN	Ajc	27-07-2016
CHECKED	-	-
ENG APPR.	NONE	-

THE INFORMATION CONTAINED IN THIS DRAWING IS THE SOLE PROPERTY OF YWGM.
ANY REPRODUCTION IN PART OR AS A WHOLE WITHOUT THE WRITTEN PERMISSION OF YWGM IS PROHIBITED.

White Gum Air Park - YWGM

Hangar Apartment
H01 - Fred Selly

SIZE A3 | DWG. NO. A2015-0315-H1 | REV. 3

SCALE: 1:40 | WEIGHT: 0 Kg | SHEET 3 OF 7

CERTIFIED
MetroCert
BUILDING APPROVALS
12/09/2016

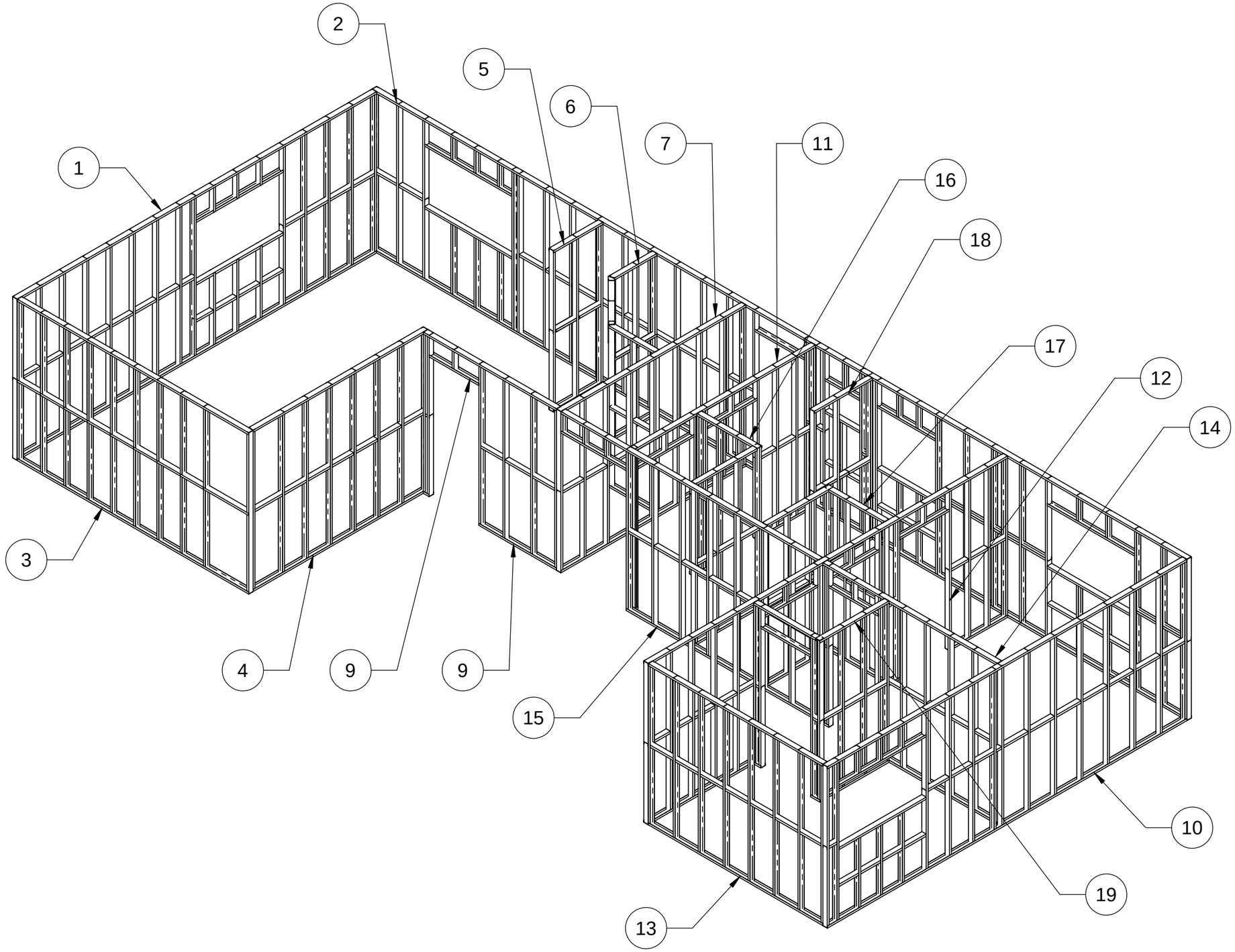

WHITE GUM AIR PARK 27
www.ywgm.com.au

TOLERANCES:

ONE PLACE DECIMAL ± 0.1
TWO PLACE DECIMAL ± 0.05
THREE PLACE DECIMAL ± 0.02
ANGULAR: MACH ± 0.1
ALL WELDS U.N.O. 6

DO NOT SCALE DRAWING

DRAWN	Ajc	27-07-2016
CHECKED	-	-
ENG APPR.	NONE	-

THE INFORMATION CONTAINED IN THIS DRAWING IS THE SOLE PROPERTY OF YWGM.
ANY REPRODUCTION IN PART OR AS A WHOLE WITHOUT THE WRITTEN PERMISSION OF YWGM IS PROHIBITED.

White Gum Air Park - YWGM

Hangar Apartment
H01 - Fred Selly

SIZE	DWG. NO.	REV.
A3	A2015-0315-H1	3

SCALE: 1:50 | WEIGHT: 0 Kg | SHEET 4 OF 7

Department of Planning

Western Australian Planning Commission

PLANNING IN BUSHFIRE PRONE AREAS

BAL ASSESSMENT (BASIC) REPORT

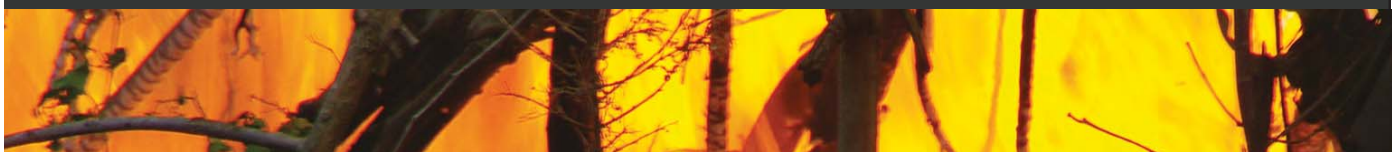

A BAL REPORT FOR A PROPOSED BUILDING ON A SITE THAT IS NOT WITHIN 100 METRES OF BUSHFIRE PRONE VEGETATION

Please read the BAL Assessment (Basic) fact sheet before completing this report.

1. Fire Danger Index (FDI)

Determine the FDI for your site. The FDI for all of Western Australia is 80.

80

2. Bushfire prone vegetation

Determine if there is bushfire prone vegetation within 100 metres of the proposed building. Insert NIL where there is no bushfire prone vegetation within 100 metres of the proposed building.

NIL

3. Distance between the proposed building and bushfire prone vegetation

Determine the horizontal distance between the proposed building and the nearest bushfire prone vegetation in the area surrounding the proposed building. Insert YES where the horizontal distance is greater than 100 metres on flat land and 110 metres on sloping land.

YES

4. Slope of the land under bushfire prone vegetation

Determine the horizontal distance between the proposed building and the nearest bushfire prone vegetation. Insert N/A where the horizontal distance is greater than 100 metres on flat land and 110 metres on sloping land.

N/A

Step 5: Bushfire Attack Level (BAL)

Determine the BAL for the proposed building or development. Insert the BAL.

LOW

If the BAL is BAL–LOW, then this report may be used to support a relevant application for the proposed building or development. If the BAL is **not** BAL–LOW, this report should not be used.

Attach any supporting information (i.e. site plans, photos, aerial photography and other design documents and specifications) as evidence that your site is not within 100 metres of bushfire prone vegetation.

I certify that the inputs into this BAL assessment (basic) report are a true and accurate representation of the conditions of the proposed building and site on the date of this assessment for the site located at:

Cameron Road, York

And being the whole of the land described in Certificate of Title: Lot 2308 On Deposited Plan 255532

The BAL rating is: LOW Date of assessment: 19-06-2019

Signed: .....

Postal address: .....

Phone: ..... Email: .....